Taos Floor-mount Tub Filler with Handshower
17-05

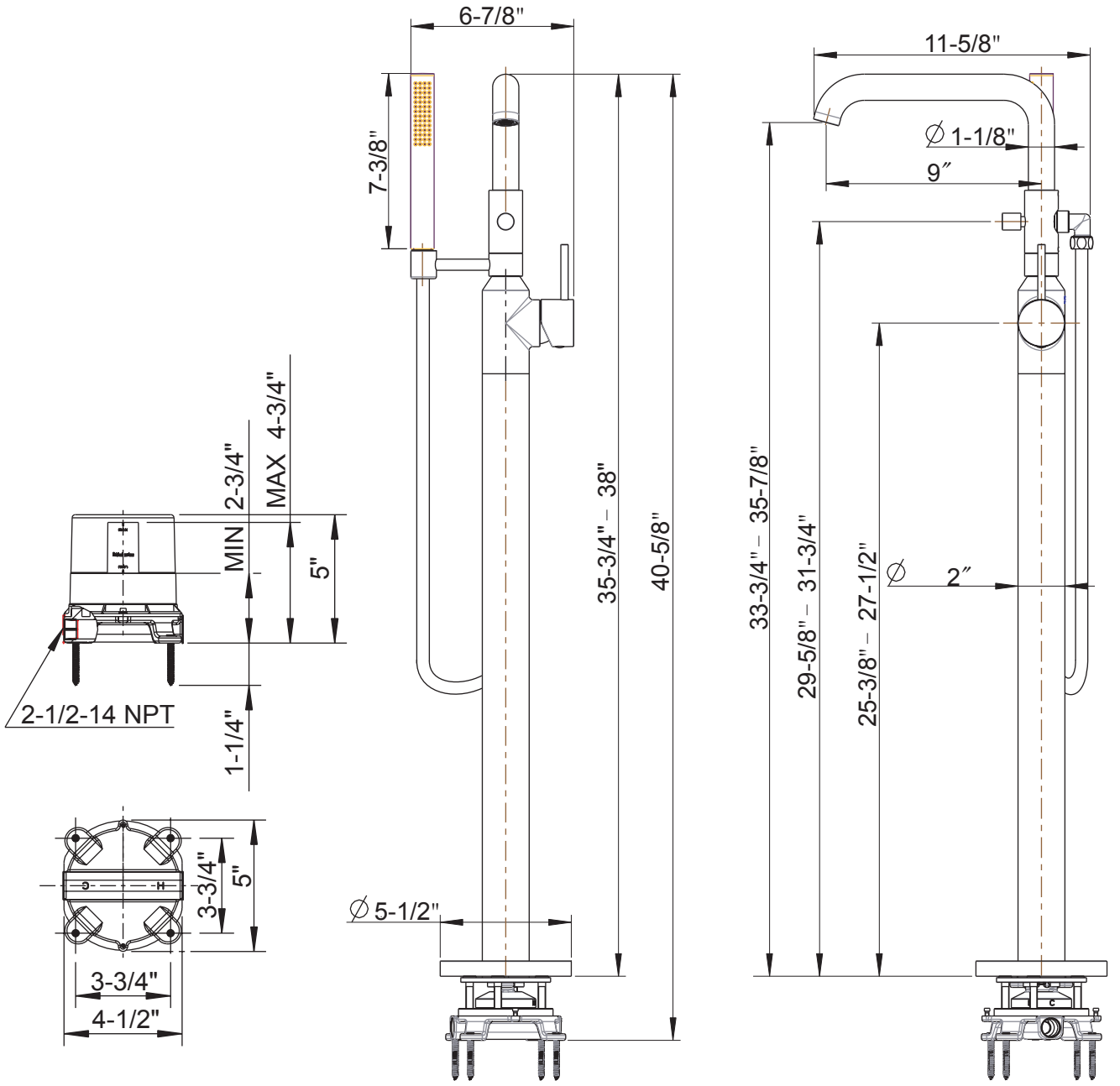

crosswater
LONDON